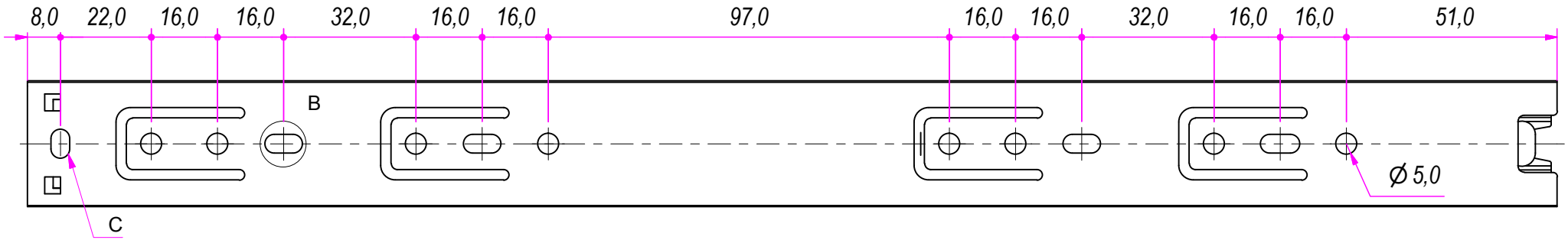

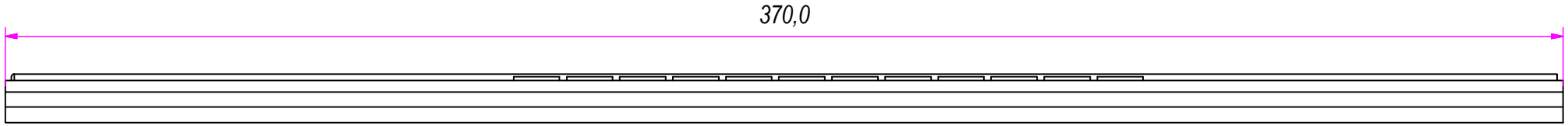

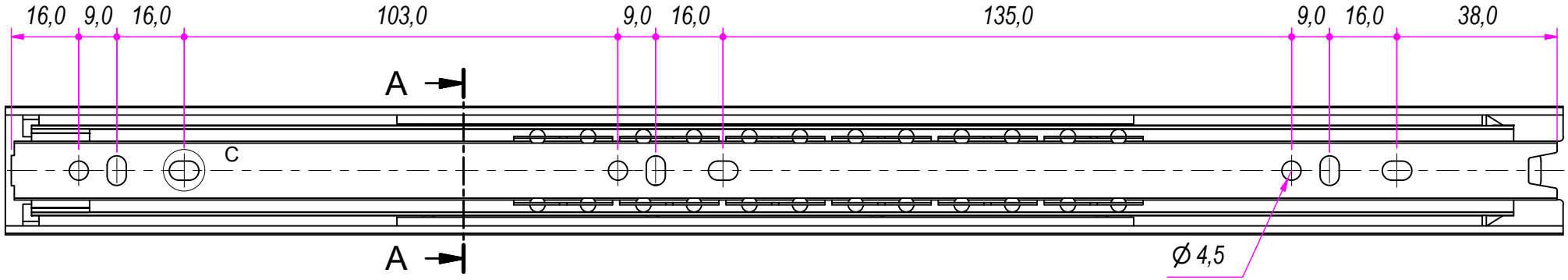

SEZ. A-A

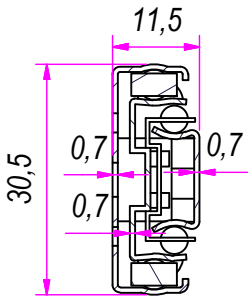

B (1 : 1)

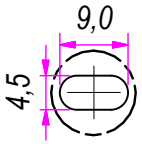

C (1 : 1)

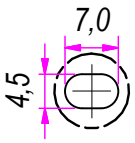

Guide per cassetti; guide telescopiche	Coulisses à billes; coulisse télescopique	REVISION HISTORY		
Drawer slide; telescopic ball bearing slide	Guías para cajones; guía teleópica	REV	DESCRIPTION	DATE
Kugelführung; Teleskopschienen		1a		20/04/2018

DESIGNED BY: F.Dino	CHECKED AND APPROVED BY: L. Paleari	GENERAL TOLLERANCE: SS-ISO-2768-1M	DATE: 20/04/2018	CODE: C31370
RAM INDUSTRIE		PACKAGING: Carton 40 sets/Packed R+R	UNIT: mm	SHEET: 1 of 2
		DESCRIPTION: Black finishing (cataphoresis coating)	MATERIAL: Cold rolled steel	
		DEVICE	PAIR WEIGHT: 0,42 Kg	

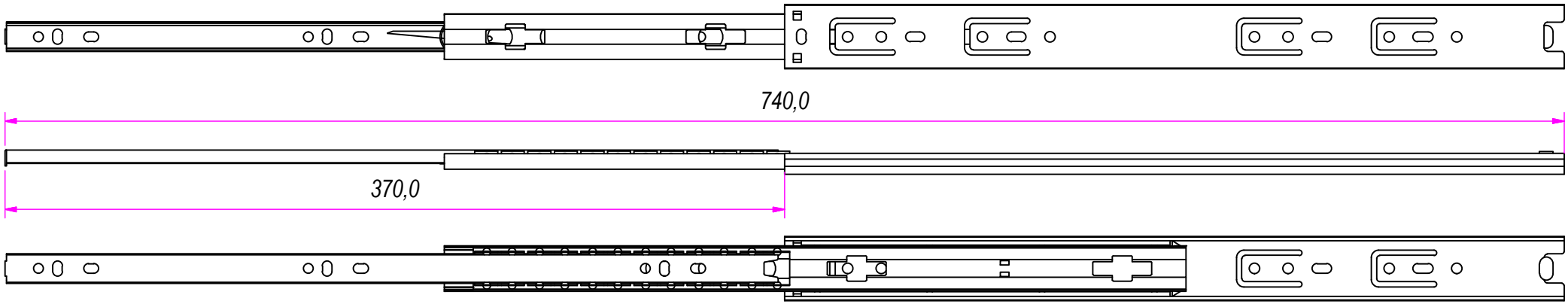

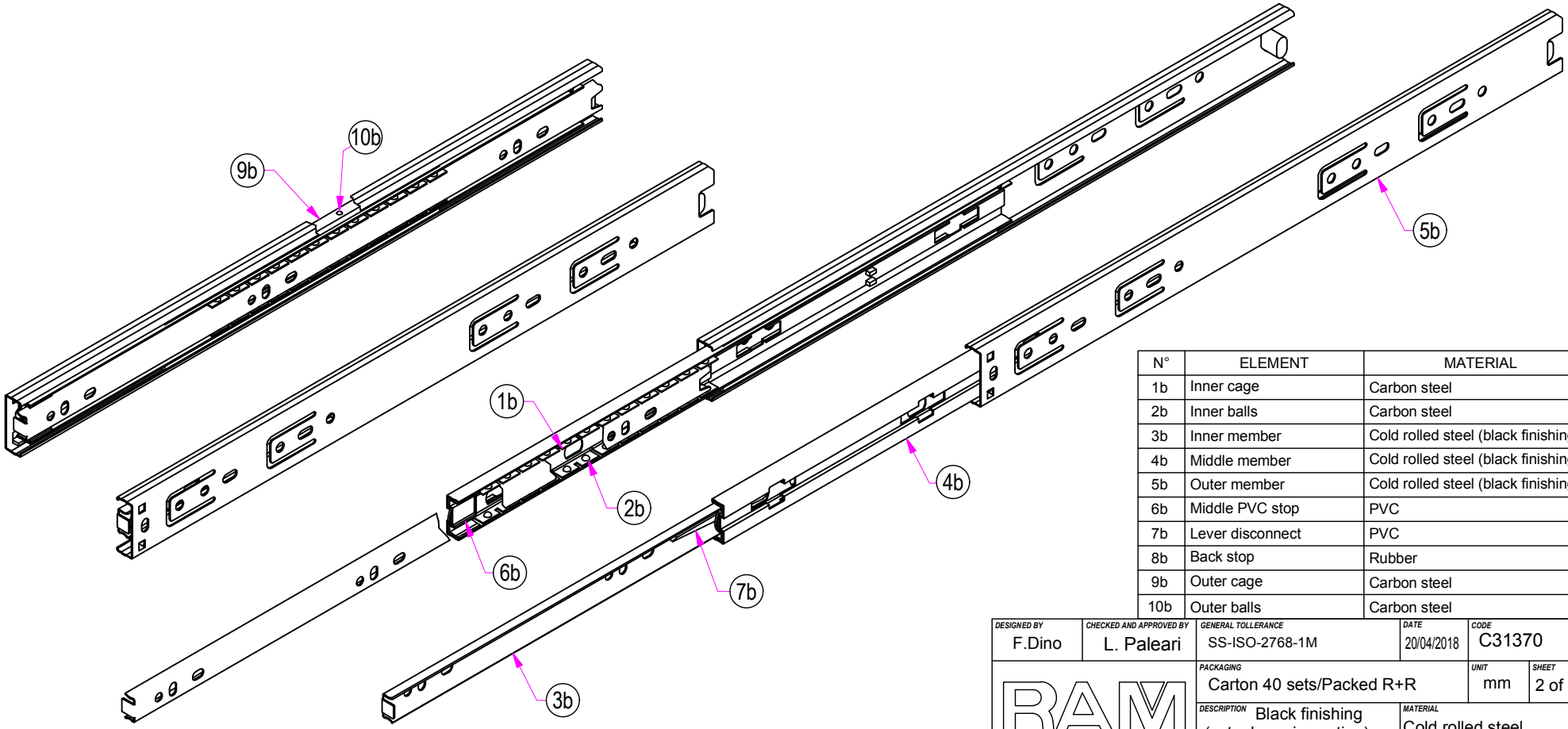

N°	ELEMENT	MATERIAL
1b	Inner cage	Carbon steel
2b	Inner balls	Carbon steel
3b	Inner member	Cold rolled steel (black finishing)
4b	Middle member	Cold rolled steel (black finishing)
5b	Outer member	Cold rolled steel (black finishing)
6b	Middle PVC stop	PVC
7b	Lever disconnect	PVC
8b	Back stop	Rubber
9b	Outer cage	Carbon steel
10b	Outer balls	Carbon steel

DESIGNED BY	CHECKED AND APPROVED BY	GENERAL TOLLERANCE	DATE	CODE
F.Dino	L. Paleari	SS-ISO-2768-1M	20/04/2018	C31370

RAM INDUSTRIE

PACKAGING	UNIT	SHEET
Carton 40 sets/Packed R+R	mm	2 of 2

DESCRIPTION	MATERIAL
Black finishing (cataphoresis coating)	Cold rolled steel

DEVICE	PAIR WEIGHT
	0,42 Kg

		REVISION HISTORY		
Guide per cassetti; guide telescopiche	Coulisses à billes; coulisse télescopique			
Drawer slide; telescopic ball bearing slide	Guías para cajones; guía teleópica	REV	DESCRIPTION	DATE
Kugelführung; Teleskopschienen		1a		20/04/2018